TRACTIAN

# Tech Fast Track 2026

## Hardware Test

© COPYRIGHT 2024 TRACTIAN TECHNOLOGIES INC
ALL RIGHTS RESERVED.

This material is protected by Copyright and the reproduction, distribution or commercialization of any material or content obtained from it is prohibited without the prior express authorization of TRACTIAN.

TRACTIAN

Task 1

# Pre-Project: Multichannel Signal Acquisition System

Hardware Team

2026

# Specifications

| Parameter | Value |
|---|---|
| Maximum input amplitude | ±25 V |
| Input type | AC or DC |
| Maximum signal frequency | 45 kHz |
| Dynamic range | 105 dB |
| Number of channels | 4, isolated |
| Acquisition method | Synchronous between channels |
| Channel-to-channel isolation | Minimum 30 V |
| Supply voltage | 24 V |
| Data/control interface | To be defined |

Based on the specifications, design a multichannel analog signal acquisition system structured in functional blocks. The project must address the following items:

1. **Functional Blocks**
   Identify and describe all functional blocks required to meet the specifications. For each block, state its role in the system.

2. **Integrated Circuits**
   For each block, indicate at least one suitable and essential commercial integrated circuit. The choice must be justified based on the relevant technical parameters derived from the specifications.

3. **General Topology**
   Present a block diagram of the system and describe how the blocks integrate to ensure simultaneous acquisition, channel-to-channel isolation, and compatibility with the 24 V supply. Justify the critical design choices that enable compliance with the requirements.

TRACTIAN

## Task 2

# PCB Component Placement Challenge

Hardware Team

2026

# Specifications

You are provided with a KiCad 9.0.6 project containing the schematic and netlist of an electronic circuit.
Perform the component placement within the delimited area on the board outline. Annotations describing critical decisions, identified constraints, or design limitations encountered must be added to the User.Comments layer.
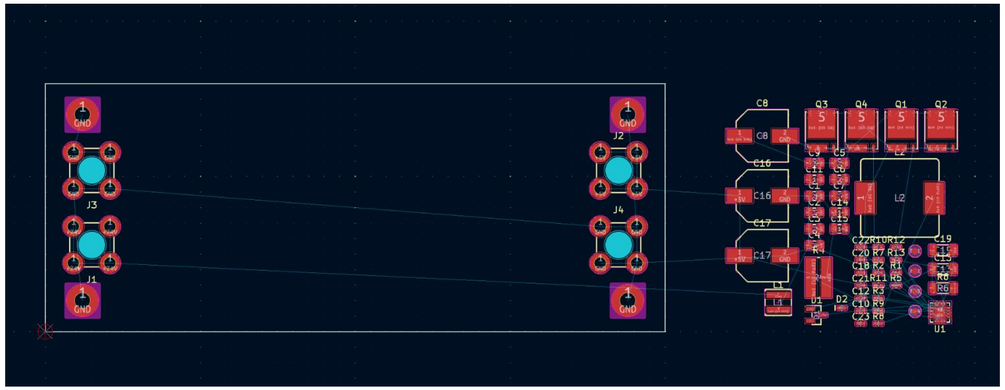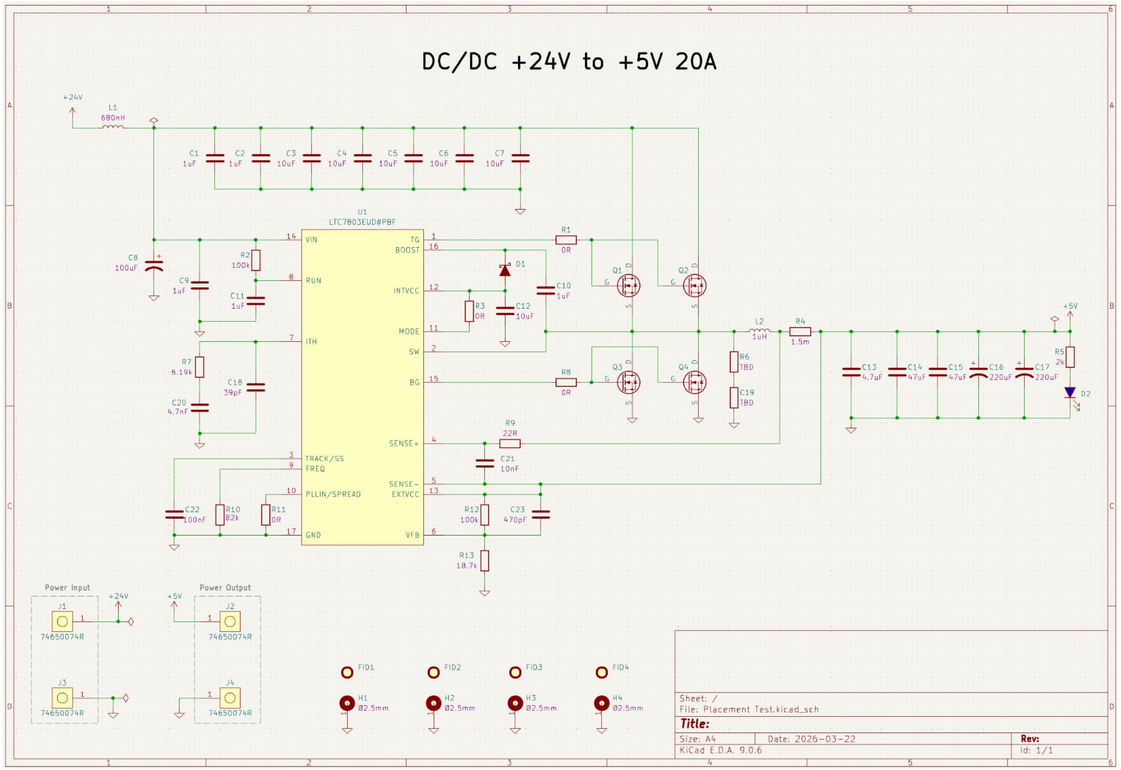
https://github.com/wloschner-tractian/tft-hardware-test